SALES DRAWING SALES DRAWING

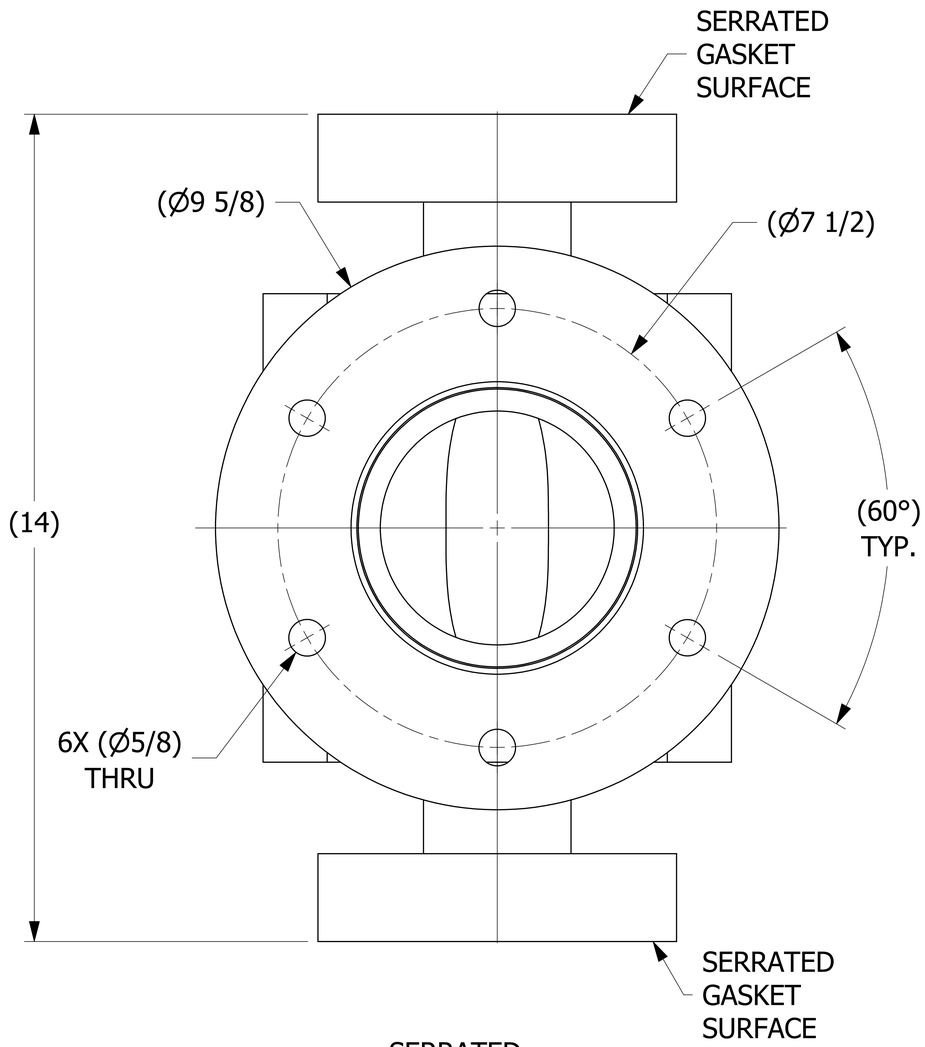


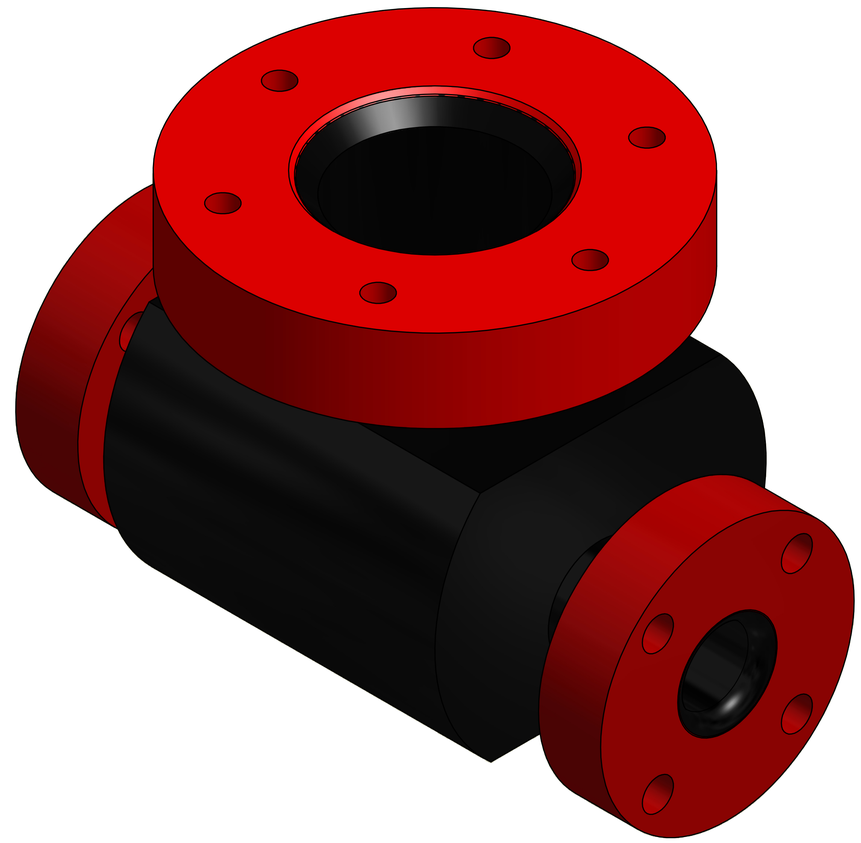

ISOMETRIC VIEW

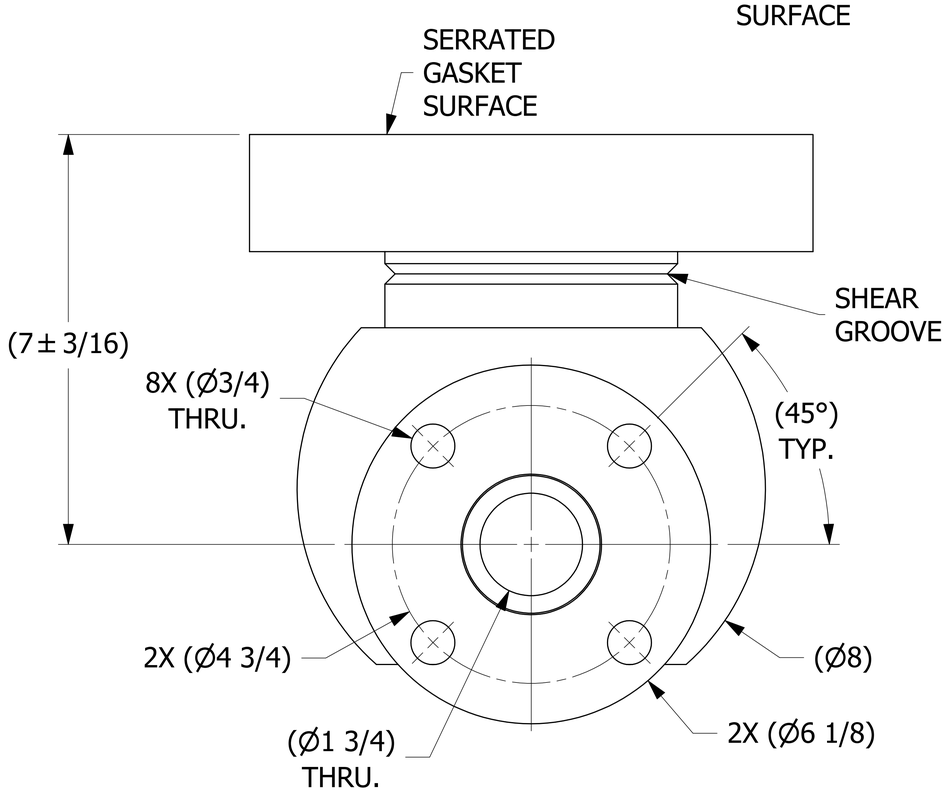


| REV | BY | DATE | DESCRIPTION |
|---|---|---|---|
| A | JG | 11-6-17 | RELEASED FOR PRODUCTION |

UNLESS OTHERWISE SPECIFIED DIMENSIONAL TOLERANCES
FRACTIONAL: ±1/16
X.XX: ±.03
X.XXX: ±.015
ANGULAR: ±1°
DEBURR ALL SHARP EDGES.
ALL MACHINED SURFACES TO HAVE A 125 RMS FINISH UNLESS NOTED OTHERWISE.
THIRD ANGLE PROJECTION

| | |
|---|---|
| DRAWN BY: | JG |
| CHECKED BY: | EJF |
| PROTOTYPE BY: | JG |
| PROTOTYPE DATE: | 8/27/2017 |
| APPROVED FOR PRODUCTION BY: | EJF |
| PRODUCTION DATE: | 11/6/2017 |

SALCO PRODUCTS, INC.

PART NAME: PIPE TEE 2"X4"

MATERIAL: SALCO PE

PROJECT #: H170828F | SHEET #: 1 OF 1 | SCALE: 1:1

DRAWING #: E45997 | PART #: HS2X4PT3

THIS PRINT, PROPERTY OF SALCO PRODUCTS INC, CONTAINS PROPRIETARY INFORMATION AND MUST NOT BE COPIED, REPRODUCED, OR USED DETRIMENTALLY TO OUR INTEREST.

SALES DRAWING SALES DRAWING